STEINHOF

SAAR CERT TÜV ISO 9001:2008

Certificate 71 100 J 618

TOW BAR H-031
Honda Civic (5D) (2006 - r.)
FITTING AND OPERATION MANUAL.

Cat. No.H-031

DESTINATION

Tow bar **H-031** for a **Honda Civic (5D)** is designed for towing a trailer. This ball hook has a current certification of approval authorizing the product with **e20** certification sign.

FITTING CONDITIONS

Tow bar **H-031** can be used and operated in a car with proper technical conditions of body elements. Those parts cannot be mechanically damaged . The ball hook has to be installed and operated in a car according to this instruction . All bolts and nuts in ball hook have to be screwed down with proper torque (M_o) . Torque values are given below :

M8	-	**25**	(Nm)	M12	-	**85**	(Nm)
M10	-	**50**	(Nm)	M16	-	**200**	(Nm)

OPERATION CONDITIONS

The tow bar **H-030** has a rating plate describing correct and safe loads of the hook :

Typ: **H-031**	The tow bar for **Honda Civic (5D)**
A50-X	Tow bar class (compressing device)
e20 **0383-00**	Tow bar certification of approval number
D = 8,8 kN	Teoretical related force working on a ball hook
S = 75 kg	Max permissible vertical load of the hook ball
R = 1700 kg	Max permissible load of towing trailer

D - force is calculated using the following formula:

$$D = g \times \frac{T \times R}{T+R} \text{ kN}$$

T-technically permissible maximum mass in tonnes of the towing vehicale (also towning tractors) including, if neccessary, the vertical load of a centrale axle trailer.
R-technically permissible maximum mass in tonnes of the full trailer with drawgal free to move in the vertical plane or of the semi-trailer.
g-acceleration due to gravity(assumed as 9,81 m/s^2)

During operating individual elements of ball hook should be kept in a proper technical condition and protected from corrosion . The trailer must be linked with an elastic joint with proper durability (cord, chain) while towing .It is necessary to check periodically bolt joints during operating the ball hook. If screws are eased , it is necessary to screw them down .

FITTING

The tow bar **H-031** for **Honda Civic (5D)** is made up of the following elements :

1.Towbar mainframe	- 1 piece	11.Bolt M12x35	- 4 pieces
2.Right support	- 1 piece	12.Bolt M12x100	- 3 pieces
3.Left support	- 1 piece	13.Spring washer 8,2	- 4 pieces
4.Electrical socket plate	- 1 piece	14.Spring washer 10,2	- 4 pieces
5.Tow ball	- 1 piece	15.Spring washer 12,2	- 7 pieces
6.Distance washer	- 2 piece	16.Special washer 24 8,5x2,5	- 4 pieces
7.Special washer 40 12,5 21,5	- 2 pieces	17.Flat washer 10,5	- 4 pieces
8.Special washer 40/ 12,5x2,5	- 4 pieces	18.Flat washer 13,0	- 3 pieces
9.Bolt M8x30	- 4 pieces	19.Nut M10	- 4 pieces
10.Bolt M10x30	- 4 pieces	20.Nut M12	- 3 pieces

Follow the general directions in order to fit **H-031** towbar properly:

1.Rear bumper cutting is required.
2.Dismantle rear bumper.
3.Remove bumper reinforcement and take the tow bar to pieces.
4.Remove the excess of anticorrosion surface.
5.Put (2) and (3) into chassis rails and then attach using (11), (8) and (15).
6.Attach (1) to (2) and (3) using (10), (17), (14) and (19).
7.Fit (1) to towing lug using (12), (7), (18), (15) and (20).
8.Attach (2) and (3) to bumper using (9), (16) and (13).
9.Put bumper back and mark the places to be cut off. Cut them off.
10.Attach (5) and (4) to (1) using (6), (12), (18), (15) and (20).
11.Fit back the bumper.
12.Check if all fixing bolts and nuts are correctly tightened.

CAUTION: After mounting the ball hook there is no place to put the bumper strengthening in stringers.

Obeying this instruction assures correct montage and the tow bar operating in a Honda Civic (5D)

After assembling of the tow bar **H-031** you have to get entry in cars **registration book** in a quality control station .

CAUTION :

All mechanical damages of tow bar excludes its further exploitation . Damaged ball hook **cannot be repaired**. In case of braking the rules of montage or unproper usage manufacturer **do not take responsibility** for arised damages .

MONTAGE DIAGRAM :

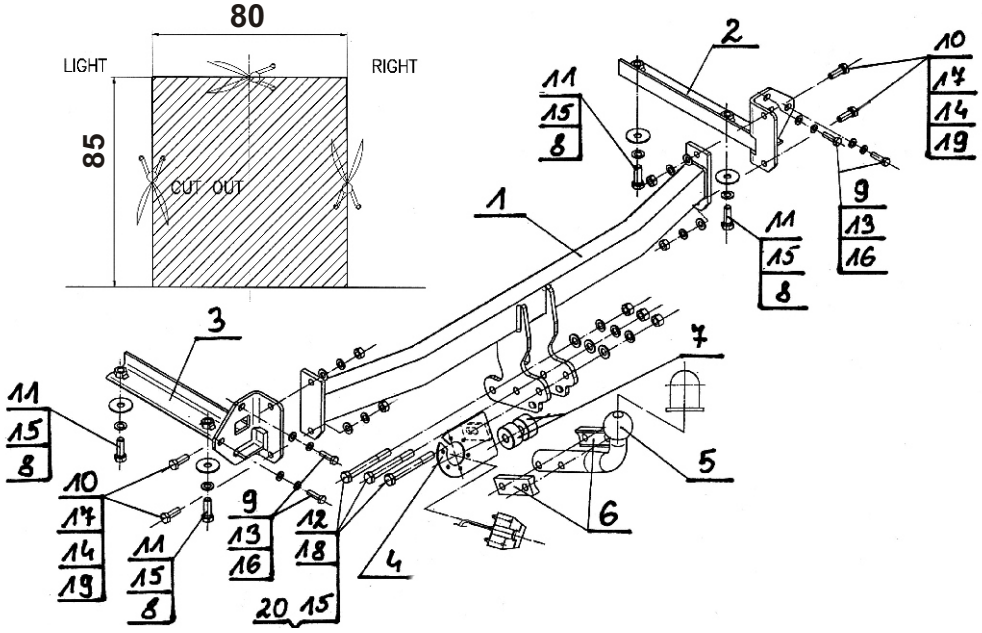

NOTE :

Bunch of wires is not included (in total price).